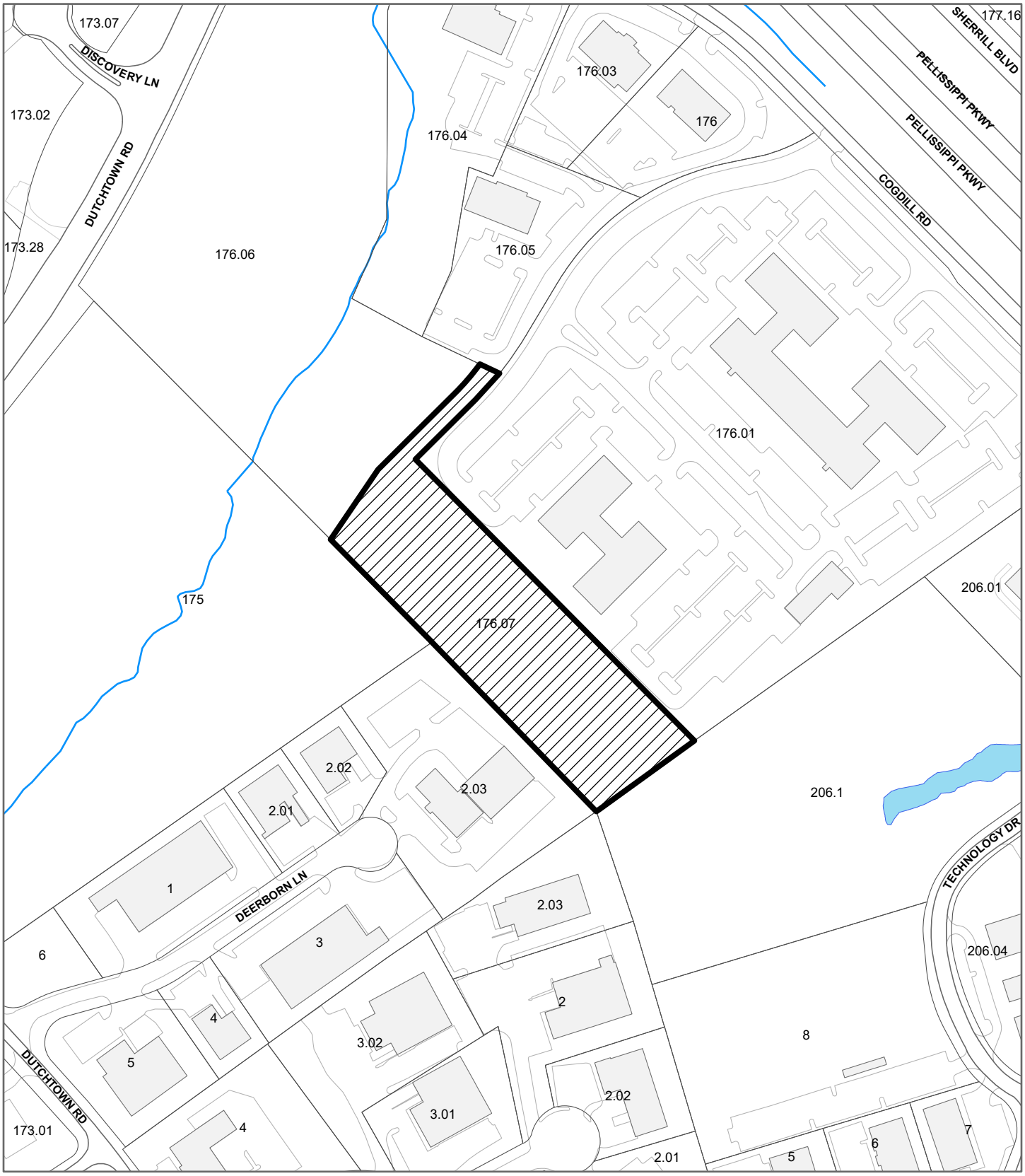

4-B-22-TOA
CERTIFICATE OF APPROPRIATENESS

Petitioner: Lincoln Memorial University

Purpose of Request: Building Permit

Map No: 131
Jurisdiction: City

0 250
Feet

N

Original Print Date: 3/14/2022 Revised:

*Knoxville - Knox County Planning Commission * City / County Building * Knoxville, TN 37902*

PLANS FOR

DeBusk College of Ostepathic Medicine Parking Expansion

PREPARED FOR

LINCOLN MEMORIAL UNIVERSITY KNOXVILLE, TENNESSEE

SHEET INDEX

NUMBER	DESCRIPTION
1	COVER SHEET
2	CURB AND PARKING LAYOUT
3	GRADING PLAN
4	PRELIMINARY DRAINAGE PLAN
5	SPECIES-SPECIFIC LANDSCAPE PLAN
6	EROSION CONTROL PLAN
7-9	DETAILS

Property Owner Information
LMU
9731 Cogdill Rd.
Knoxville, TN 37902
(423)-869-6418
david.laws@lmu.net
Parcel Number: 118 17601
City Block/ Lot Number: 46/46368

COORDINATE SYSTEM

Coordinates are based on State Plane Coordinate System Tennessee State Plane Zone and in U.S. Survey Feet. (Vertical datum reference: NAVD88)

Tennessee 811

Know what's below. Call before you dig.

BEFORE YOU DIG

The contractor is instructed to call 1-800-351-1311 to reach TN 811, the one-call system for information on the location of existing underground utilities. The call is to be placed a minimum of two (2) and no more than ten (10) business days prior to excavation. The contractor should be aware that owners of underground facilities are not required to be members of the TN 811 one-call Before-U-Dig (BUD) service. The contractor must coordinate excavation with the utility owners, including those whom do not subscribe to TN 811. It may be necessary for the contractor to contact the County Court Clerk to determine what utility companies have facilities in the area.

PREPARED BY

V&M
Vaughn & Melton
Consulting Engineers, Inc.
109 SOUTH 24th STREET
MIDDLESBORO, KENTUCKY 40965
Phone: (606) 248-6600
KENTUCKY - TENNESSEE - NORTH CAROLINA - SOUTH CAROLINA - GEORGIA

MILLARD COREY NAPIER
REGISTERED ENGINEER
AGRICULTURE
COMMERCE
No. 120904
STATE OF TENNESSEE

2-22-22

4-B-22-TOA

PROJECT ENGINEER	DATE	REV. NO.	DESCRIPTION	DATE

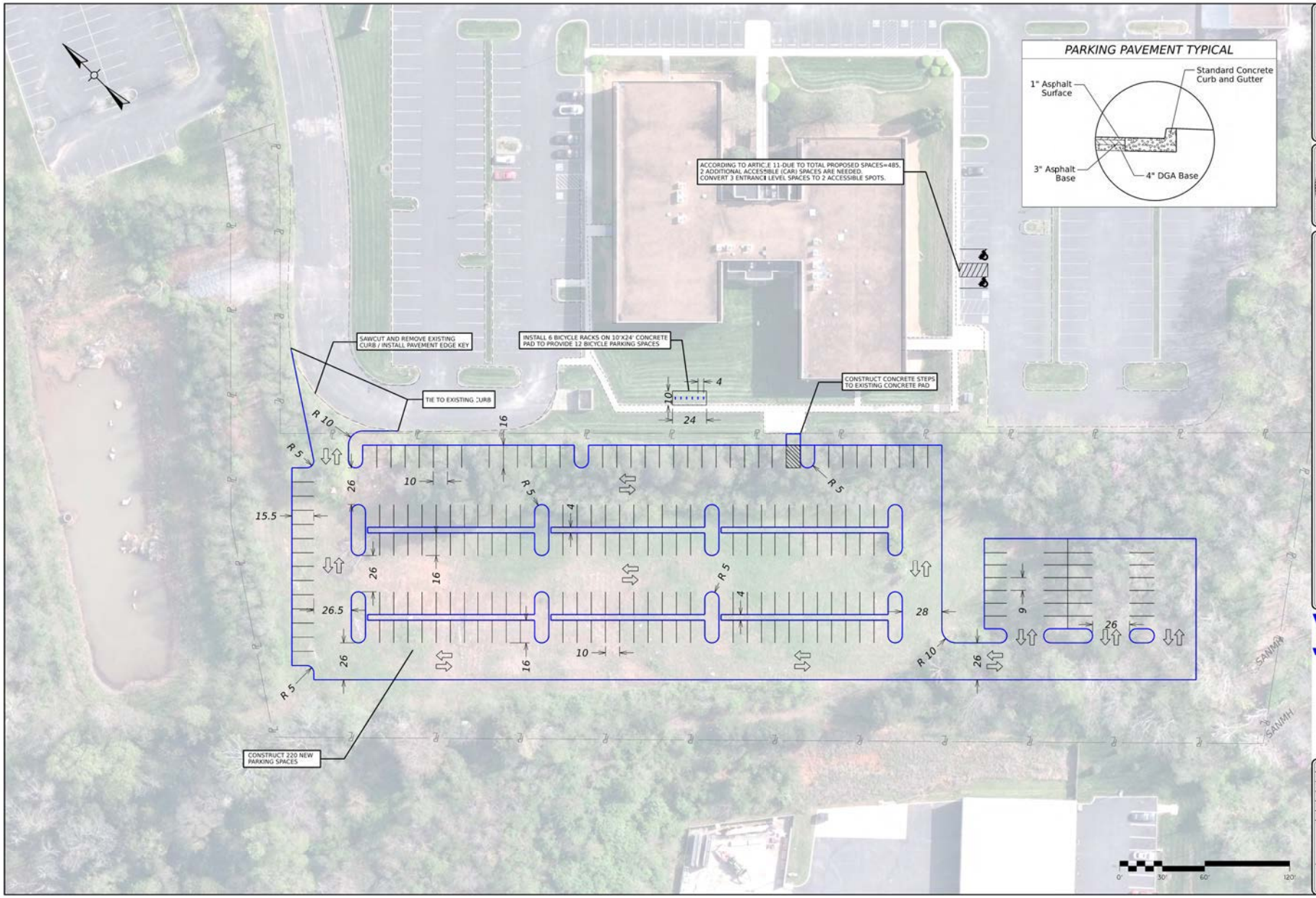

REVISIONS

NO.	DATE	DESCRIPTION

LINCOLN MEMORIAL UNIVERSITY – BUILDING NO. 2
PROPOSED PLAN FOR PARKING
KNOX COUNTY, TENNESSEE

Vaughn & Melton

Kentucky 606-249-6600
Georgia 770-627-3590
North Carolina 828-253-2796
South Carolina 843-974-5650
Tennessee 865-546-5800
www.vaughnmelton.com

Copyright © 2020
All Rights Reserved

DRAWN: LEB
CHECKED: MCN
JOB NO: 002020-12
SCALE: 1" = 30'
DATE: October 2021
FILE NAME:
DRAWING TITLE:
Curb & Parking Layout
SHEET: 2

Proposed Disturbed Area: 2.6 Acres
Proposed Impervious Area: 2.0 Acres
Volume Cut: 6975 CY
Volume Fill: 5650 CY
Borrow Material: 1325 CY

N 583093.614
E 2521191.646
Elev: 993.07'

N 582894.225
E 2521310.255
Elev: 998.23'

N 582727.329
E 2521475.497
Elev: 1000.00'

N 583025.789
E 2521179.995
Elev: 994.42'

Elev: 998.02'
N 582680.893
E 2521428.596

N 582552.981
E 2521555.239
Elev: 989.00'

N 582659.574
E 2521449.703
Elev: 995.00'

N 582628.828
E 2521376.010
Elev: 995.79'

N 582607.510
E 2521397.117
Elev: 992.78'

N 582937.421
E 2521033.889
Elev: 990.42'

N 582482.624
E 2521484.177
Elev: 986.00'

N 582610.535
E 2521357.534
Elev: 995.02'

1000' 1002' 998' 996' 994' 992' 990' 988' 986' 1000' 990' 980' 970' 1000' 1060' SANITARY

REVISIONS

NO.	DATE	DESCRIPTION

REGISTERED PROFESSIONAL ENGINEER MICHAEL CORLEY MCNEILL No. 110331 STATE OF TENNESSEE

LINCOLN MEMORIAL UNIVERSITY – BUILDING NO. 2
PROPOSED PLAN FOR PARKING
KNOX COUNTY, TENNESSEE

Vaughn & Melton

- Kentucky 606-248-6600
- Georgia 770-627-3590
- North Carolina 828-253-2796
- South Carolina 843-974-5650
- Tennessee 865-546-5800

www.vaughnmelton.com

Copyright © 2020
All Rights Reserved

DRAWN:	LCB
CHECKED:	MCN
JOB NO:	012020-12
SCALE:	1" = 30'
DATE:	October 2021
FILE NAME:	
DRAWING TITLE:	Grading Plan

Drainage Schedule					
Structure ID	Structure Type	Northing	Easting	Grate/Rim Elev.	Pipe Invert Elev.
1	18" Outlet HW	582948.759	2521028.032		983.46'
2	Water Quality Unit CS-8	582937.322	2521036.106	990.42'	984.92'
3	TDOT CB10RA	582945.453	2521042.002	990.54'	985.04'
4	TDOT CB10RA	582925.399	2521045.791	990.59'	985.65'
5	TDOT CB10RA	582744.310	2521225.085	993.13'	988.63'
6	TDOT CB10RA	582483.630	2521483.181	986.00'	981.50'
7	Water Quality Unit CS-4	582501.513	2521501.242	986.70'	981.32'
8	18" Outlet HW	582485.583	2521517.014		974.88'

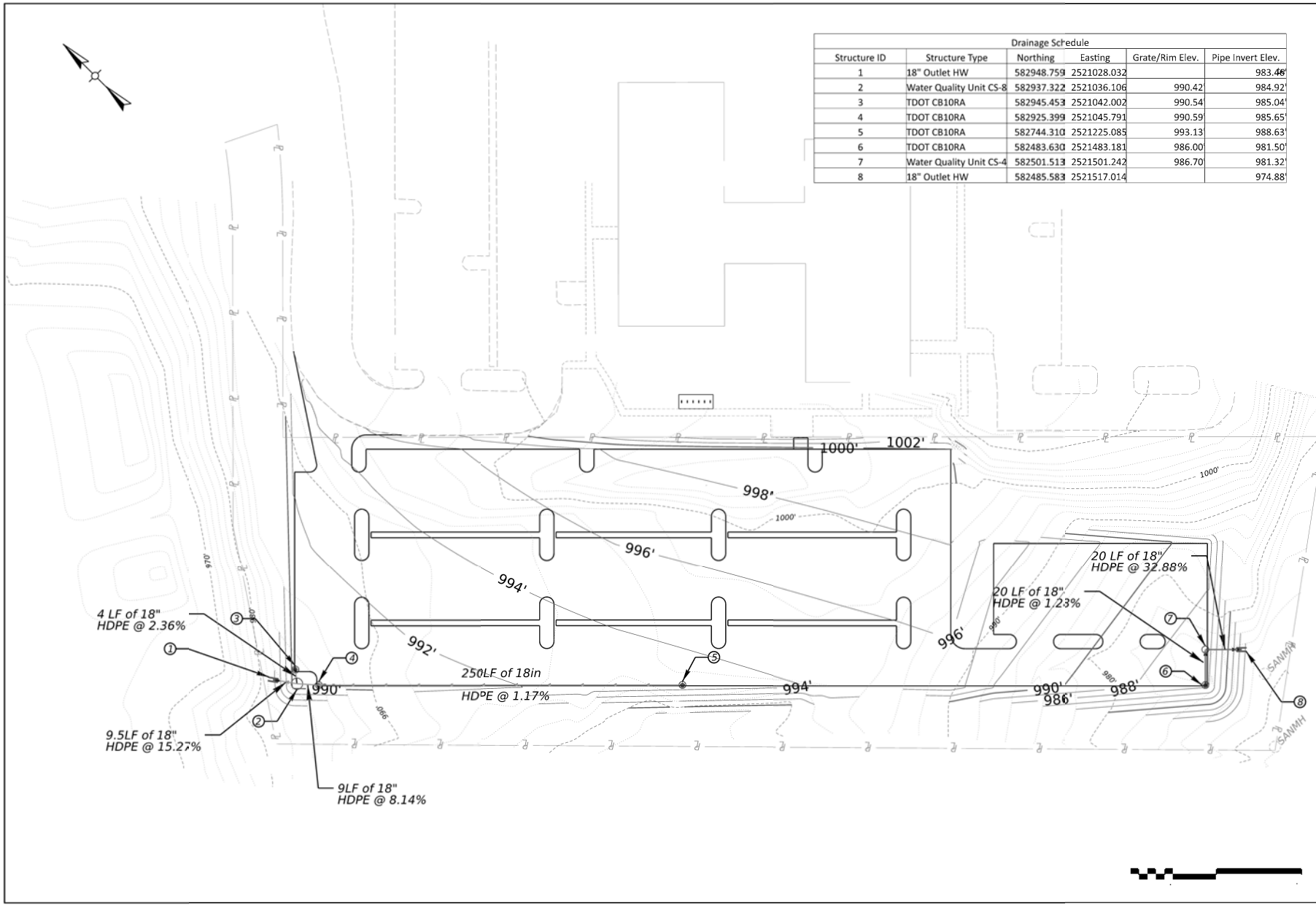

REVISIONS

NO.	DATE	DESCRIPTION

LINCOLN MEMORIAL UNIVERSITY – BUILDING NO. 2
PROPOSED PLAN FOR PARKING
KNOX COUNTY, TENNESSEE

Vaughn & Melton

Kentucky 606-248-6600
Georgia 770-627-3590
North Carolina 828-253-2796
South Carolina 843-874-5650
Tennessee 865-546-5800
www.vaughnmelton.com

Copyright © 2020
All Rights Reserved

DRAWN: LEB
CHECKED: MCN
JOB NO: 002020-12
SCALE: 1" = 30'
DATE: October 2021
FILE NAME:
DRAWING TITLE:
Preliminary Drainage Plan

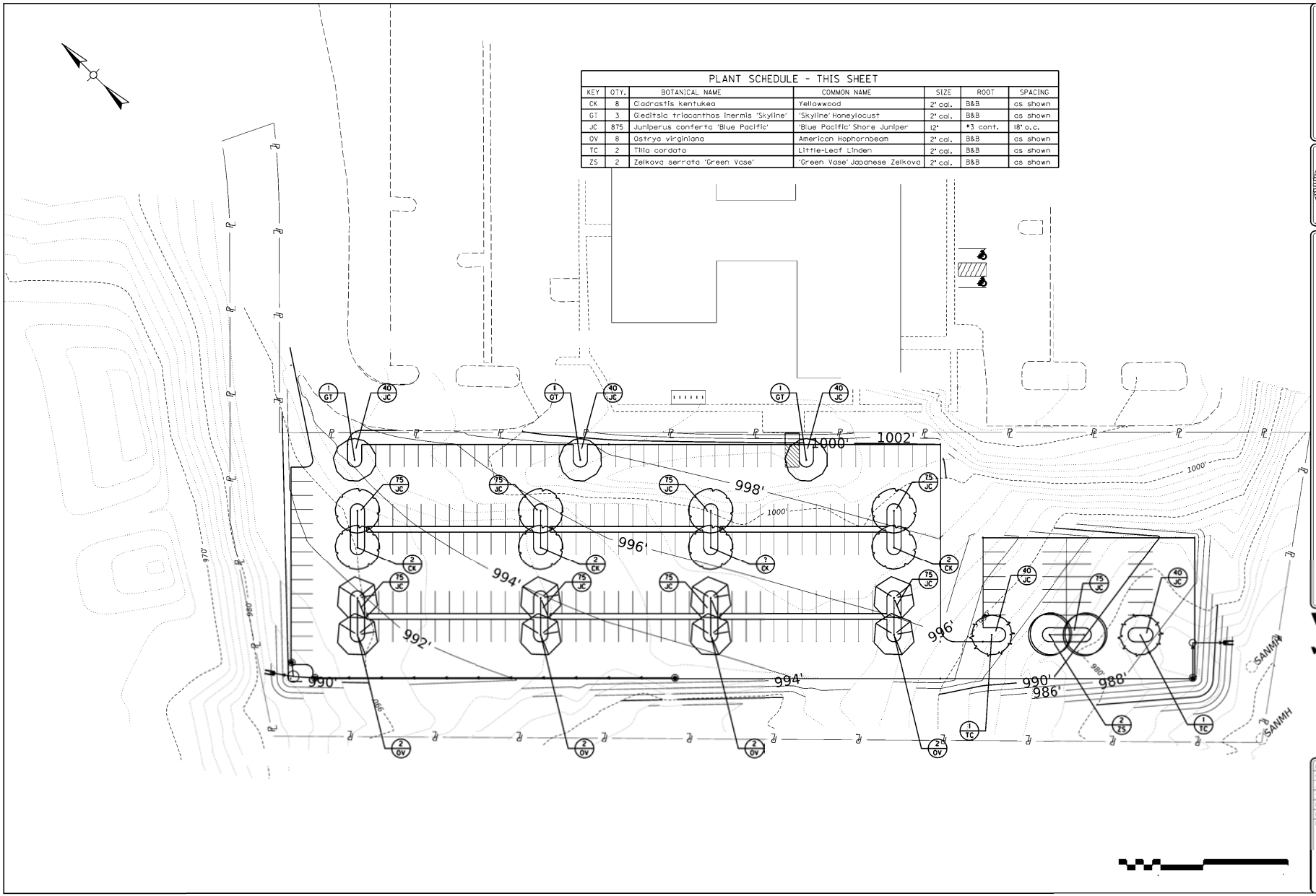

PLANT SCHEDULE - THIS SHEET

KEY	QTY.	BOTANICAL NAME	COMMON NAME	SIZE	ROOT	SPACING
CK	8	Cladrastis kentukea	Yellowwood	2" cal.	B&B	as shown
GT	3	Gleditsia triacanthos inermis 'Skyline'	'Skyline' Honeylocust	2" cal.	B&B	as shown
JC	875	Juniperus conferta 'Blue Pacific'	'Blue Pacific' Shore Juniper	12"	#3 cont.	18" o.c.
OV	8	Ostrya virginiana	American Hophornbeam	2" cal.	B&B	as shown
TC	2	Tilia cordata	Little-Leaf Linden	2" cal.	B&B	as shown
ZS	2	Zelkova serrata 'Green Vase'	'Green Vase' Japanese Zelkova	2" cal.	B&B	as shown

REVISIONS

NO.	DATE	DESCRIPTION

LINCOLN MEMORIAL UNIVERSITY – BUILDING NO. 2
PROPOSED PLAN FOR PARKING
KNOX COUNTY, TENNESSEE

Vaughn & Melton
Kentucky 606-248-6600
Georgia 770-627-3590
North Carolina 828-253-2796
South Carolina 843-974-5650
Tennessee 865-546-5800
www.vaughnmelton.com
Copyright © 2020
All Rights Reserved

DRAWN: LCB
CHECKED: MCN
JOB NO: 012020-12
SCALE: 1" = 30'
DATE: October 2021
FILE NAME:
DRAWING TITLE:
Landscape Plan

5

Proposed Disturbed Area: 2.6 Acres
Proposed Impervious Area: 2.0 Acres
Volume Cut: 6975 CY
Volume Fill: 5650 CY
Borrow Material: 1325 CY

EROSION CONTROL LEGEND

ROCK CHECK DAM	
STORM DRAIN INLET PROTECTION	
SILT FENCE	—— SF ——
OUTLET PROTECTION	

TEMPORARY UPLAND SEEDING SPECIFICATIONS

SEEDING MIXTURE		
SEEDING DATES	COMMON NAME (SPECIES)	APPLICATION RATE (LBS/ACRE)
FALL (AUG. 15 to DEC. 30)	RYE GRAIN (SECALE CEREALE)	120
EARLY SPRING (JAN. 11 TO MAY 1)	RYE GRAIN (SECALE CEREALE)	120
SUMMER (MAY 1 TO AUG. 15)	GERMAN MILLET (SETARIA ITALICA)	40
SOIL AMENDMENTS		
NOTE	AMENDMENT	APPLICATION RATE (LBS/ACRE)
FOLLOW RECOMMENDATIONS OF SOIL TESTS OR APPLY BOTH:	GROUND AGRICULTURAL LIMESTONE	2,000
	10-10-10 FERTILIZER	750
LIMESTONE APPLIED AT A MINIMUM OF 2 TONS/ACRE WITH 3 TONS/ACRE IN CLAY SOILS OR PER SOILS TEST.		
MULCH		
NOTE	MULCH	APPLICATION RATE (LBS/ACRE)
APPLY BY BLOWING, NETTING, OR ASPHALT TACKING AT 400 GAL/AC.	GRAIN STRAW	4,000
MAINTENANCE		
RE-FERTILIZE IF GROWTH IS NOT FULLY ADEQUATE. RESEED, RE-FERTILIZE AND MULCH IMMEDIATELY FOLLOWING EROSION OR OTHER DAMAGE. GROUND STABILIZATION SHALL BE PERFORMED PER "STABILIZATION TIME FRAMES" CHART OR AS OTHERWISE SPECIFIED FOR SAFETY REASONS.		

PERMANENT UPLAND SEEDING SPECIFICATIONS

SEEDING MIXTURE		
SEEDING DATES	COMMON NAME (SPECIES)	APPLICATION RATE (LBS/ACRE)
SEP. 1 TO APRIL 15	KY 31 TALL FESCUE (FESTUCA ARUNDINACEA)	200
NURSE CROPS		
SEEDING DATES	COMMON NAME (SPECIES)	APPLICATION RATE (LBS/ACRE)
MAY 1 TO AUG. 15	GERMAN MILLET (SETARIA ITALICA)	10
MAY 1 TO AUG. 15	SUDAN GRASS (SORGHUM SACCHARATUM) (S. BICOLOR SSP. DRUMMONDII)	15
PRIOR TO MAY 1 OR AFTER AUG. 15	RYE GRAIN (SECALE CEREALE)	40
SOIL AMENDMENTS		
NOTE	AMENDMENT	APPLICATION RATE (LBS/ACRE)
FOLLOW RECOMMENDATIONS OF SOIL TESTS OR APPLY BOTH:	GROUND AGRICULTURAL LIMESTONE	4,000*
	10-10-10 FERTILIZER	1,000
* LIMESTONE APPLIED AT A MINIMUM OF 2 TONS/ACRE WITH 3 TONS/ACRE IN CLAY SOILS OR PER SOILS TEST.		
MULCH		
NOTE	MULCH	APPLICATION RATE (LBS/ACRE)
APPLY BY BLOWING, NETTING, OR ASPHALT TACKING AT 400 GAL/AC.	GRAIN STRAW	6,000
MAINTENANCE		
RE-FERTILIZE IN THE SECOND YEAR UNLESS GROWTH IS FULLY ADEQUATE. MAY BE MOWED ONCE OR TWICE A YEAR, BUT MOWING IS NOT NECESSARY. RESEED, FERTILIZE, AND MULCH DAMAGED AREAS IMMEDIATELY. GROUND STABILIZATION SHALL BE PERFORMED PER "STABILIZATION TIME FRAMES" CHART OR AS OTHERWISE SPECIFIED FOR SAFETY REASONS.		

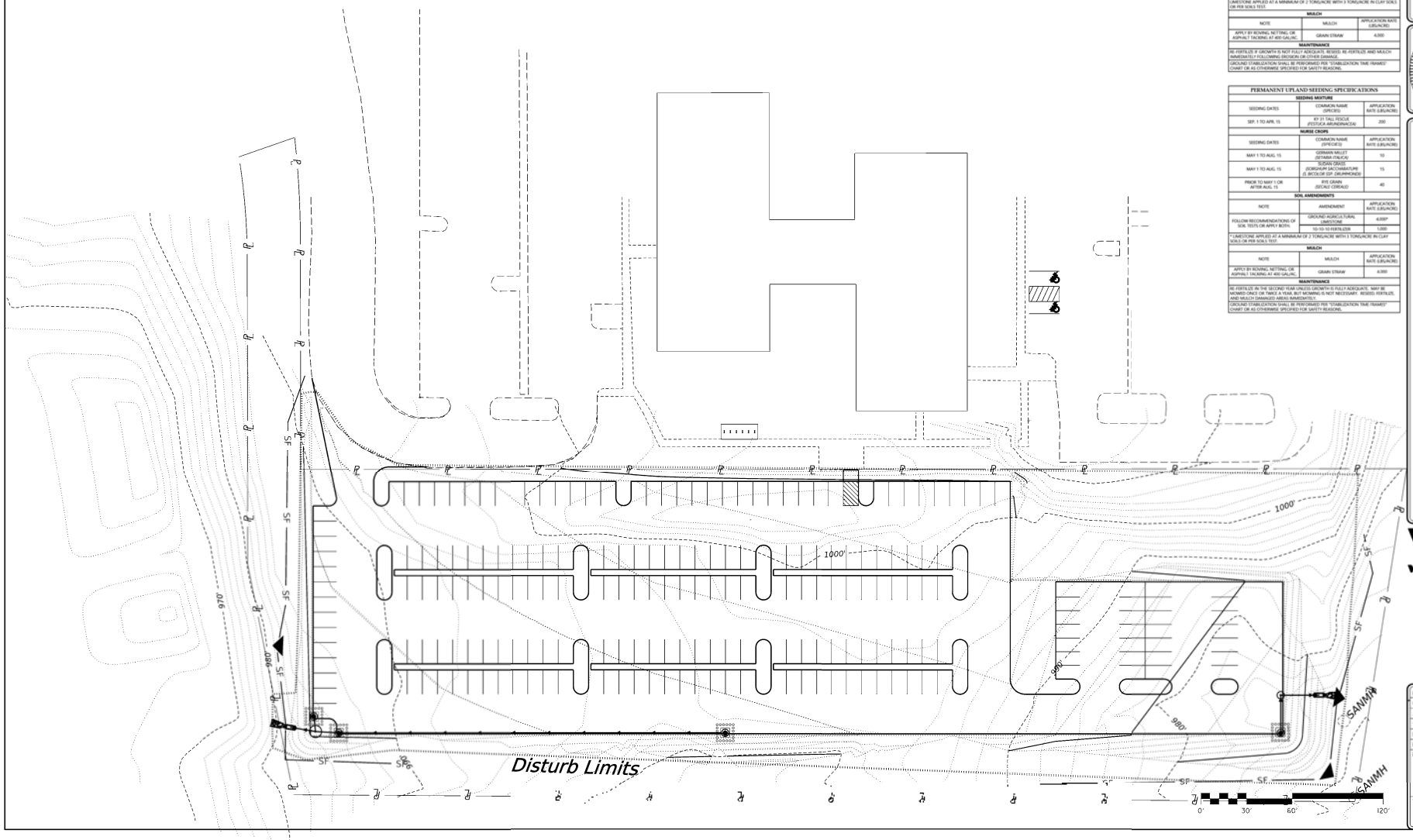

REVISIONS

NO.	DATE	DESCRIPTION

LINCOLN MEMORIAL UNIVERSITY – BUILDING NO. 2
PROPOSED PLAN FOR PARKING
KNOX COUNTY, TENNESSEE

Vaughn & Melton
Kentucky 606-248-6600
Georgia 770-627-3590
North Carolina 828-253-2796
South Carolina 843-974-5650
Tennessee 865-546-5800
www.vaughnmelton.com
Copyright © 2020
All Rights Reserved

DRAWN: LCB
CHECKED: MCN
JOB NO: 012020-12
SCALE: 1" = 30'
DATE: October 2021
FILE NAME:
DRAWING TITLE: Erosion Control Plan
SHEET: 6

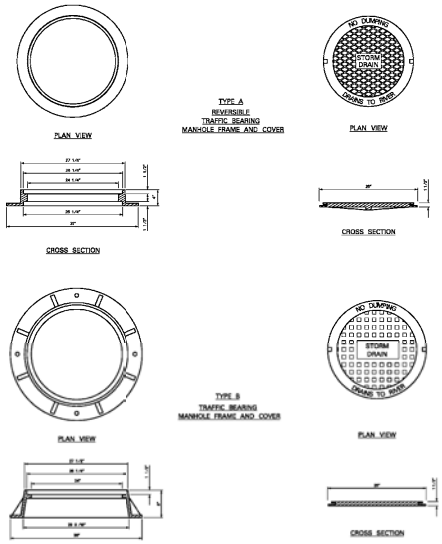

NOTES:

1. RAISED LETTERING FOR CASTINGS SHALL HAVE A MINIMUM HEIGHT OF 1/2".
2. ALL CASTINGS SHALL CONFORM TO ASTM A48 CLASS 30.
3. ENVIRONMENTAL STATEMENT ON MANHOLE COVER SHALL BE AS NOTED OR EQUIVALENT.
4. CASTINGS SHALL BE TREATED WITH TWO COATS OF BITUMINOUS PAINT.
5. TYPE 1 MANHOLE COVER SHALL NOT BE PLACED IN SIDEWALKS OR CROSSWALKS.

REVISIONS			
NO.	DATE	BY	SHEET DESCRIPTION
1	10-MAR-21	KAL	ADDED REVISED HEAD BOLTS
2	20-NOV-21	KLT	REVISED CAST IRON TYPE 1 MH COVER

CITY OF KNOXVILLE
DEPARTMENT OF ENGINEERING

STANDARD DETAIL FOR
TRAFFIC BEARING
MANHOLE FRAMES AND COVERS

CDK-2

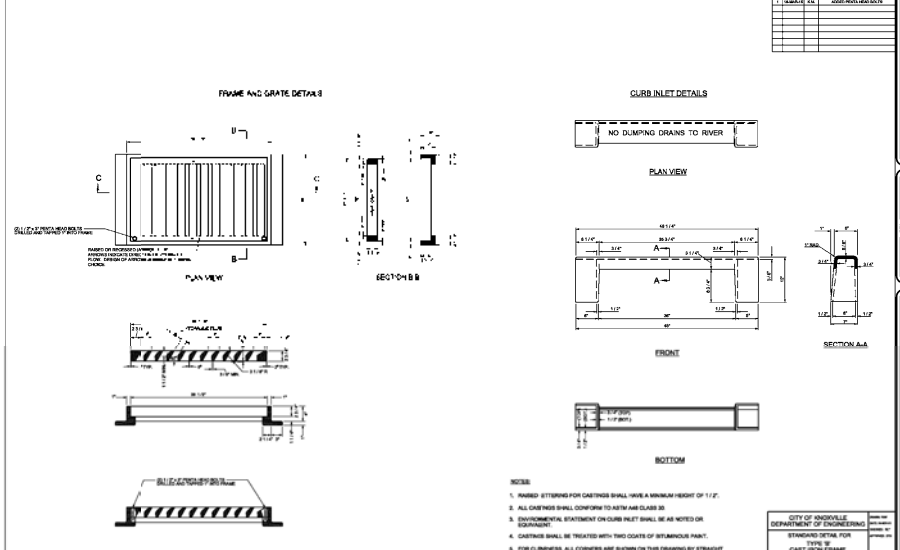

NOTES:

1. RAISED LETTERING FOR CASTINGS SHALL HAVE A MINIMUM HEIGHT OF 1/2".
2. ALL CASTINGS SHALL CONFORM TO ASTM A48 CLASS 30.
3. ENVIRONMENTAL STATEMENT ON CURB INLET SHALL BE AS NOTED OR EQUIVALENT.
4. CASTINGS SHALL BE TREATED WITH TWO COATS OF BITUMINOUS PAINT.
5. FOR CLEANNESS, ALL CORNERS ARE SHOWN ON THIS DRAWING BY STRAIGHT LINES WITH THE EXCEPTION OF THE 1" RADIUS AT THE TOP OF FACE OF CURB. ALL INSIDE CORNERS SHOULD BE MADE WITH 1 1/2" X 1 1/2" FILLETS OR 3/4" RADIUS FILLETS FOR EASE IN MOULDING.

REVISIONS			
NO.	DATE	BY	SHEET DESCRIPTION
1	10-MAR-21	KAL	ADDED REVISED HEAD BOLTS

CITY OF KNOXVILLE
DEPARTMENT OF ENGINEERING

STANDARD DETAIL FOR
TYPE 'B'
CAST IRON FRAME,
GRATE AND INLET
FOR CDK-9 AND
FOR TOOT CATCH BASINS,
Nos. 10, 12, 14, 16 AND 17

CDK-10

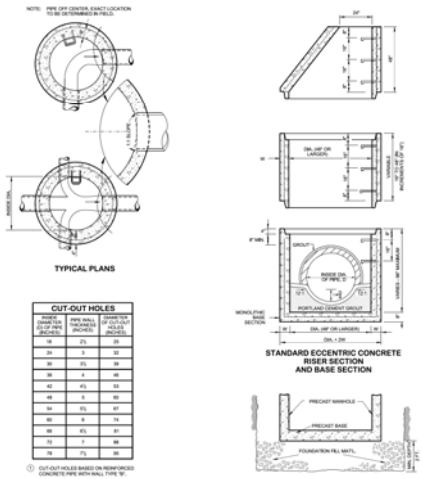

CUT-OUT HOLES		
INSIDE DIAMETER OF MANHOLE (INCHES)	PIPE WALL THICKNESS (INCHES)	DIAMETER OF CUT-OUT HOLE (INCHES)
18	2½	25
24	3	32
30	3½	39
36	4	46
42	4½	53
48	5	60
54	5½	67
60	6	74
66	6½	81
72	7	88
78	7½	95

1. CUT-OUT HOLES BASED ON REINFORCED CONCRETE PIPE WITH WALL TYPE "B".
2. ALL FLEXIBLE PIPE MATERIALS REQUIRE GASKET. SEE STANDARD DRAWING D-PB-2.
3. CUT-OUT HOLES FOR PRECAST STRUCTURES TO BE FORMED IN ORDER TO OBTAIN A SMOOTH EDGED HOLE. SCORED OR STICHED HOLES WITH REINFORCING STEEL LEFT UNCUT WILL NOT BE PERMITTED.

NOTE: COST OF FURNISHING AND PLACING FOUNDATION FILL MATERIAL TO BE INCLUDED IN UNIT PRICE BID FOR 8"-10" DIA. MANHOLES. FOUNDATION FILL MATERIAL SHALL BE IN CONFORMANCE WITH SECTION 204 OF THE T.D.O.T. STANDARD SPECIFICATIONS.

NOT TO SCALE

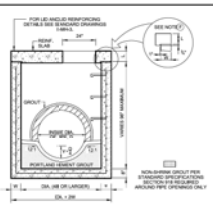

MANHOLE DIMENSIONS					
INSIDE DIA. OF MANHOLE DIA. (INCHES)	WALL THICKNESS (INCHES)	LID THICKNESS (INCHES)	OUTSIDE DIA. OF MANHOLE DIA. + 2W (INCHES)	MAX. INLET OR OUTLET CONC. PIPE SIZE = 0.75 (INCHES)	MAX. INLET OR OUTLET CONC. PIPE SIZE = 90 (INCHES)
48	5	8	58	24	15
60	6	8	72	36	24
72	7	9	86	48	30
84	8	9	100	60	36
96	9	10	114	66	42
108	10	10	126	72	48
120	11	10	142	78	54

MANHOLE MAXIMUM DEPTH NOTES
MAXIMUM DEPTH FOR PRECAST CONCRETE CIRCULAR MANHOLES IS 40.00'.

GENERAL NOTES

1. THIS MANHOLE WILL CONFORM TO THE STANDARD DRAWING UNLESS OTHERWISE SPECIFIED. ANY DEVIATION FROM THE STANDARD DRAWING MUST BE APPROVED. SHALL BE NO VARIATION FROM THE CONTRACT PRICE DUE TO SUCH CHANGES. IN ALL CASES IT MUST BE BUILT LARGE ENOUGH TO ACCOMMODATE INLET AND OUTLET PIPES.
2. THE PRECAST CONCRETE MANHOLE SHALL MEET THE REQUIREMENTS AND SPECIFICATIONS SET OFF IN ASTM(CATH LATEST REVISION.
3. THE FOLLOWING MATERIAL PROPERTIES ARE REQUIRED FOR MANHOLES:
   CONCRETE: f_c = 4,000 POUNDS PER SQUARE INCH AT 28 DAYS
   REINFORCING STEEL: ASTM A615, f_y = 60,000 POUNDS PER SQUARE INCH
   ALL REINFORCING IS TO BE INSTALLED AS DETAILED ON THIS DRAWING.
4. THE COST OF CASTINGS(FOR COVERS AND RIMS AND OF MANHOLE STEPS SHALL BE INCLUDED IN THE UNIT PRICE BID FOR MANHOLES.
5. ALTERNATIVE JOINT DETAILS MAY BE ACCEPTABLE. SEE STANDARD DRAWING D-CB-6MR FOR ADDITIONAL DETAILS.
6. PAYMENT FOR PRECAST CONCRETE CIRCULAR MANHOLES WILL BE MADE UNDER ITEM NUMBERS:
   611-01-10 MANHOLE, 10' - 14' DEPTH, EACH (THROUGH)
   611-01-27 MANHOLE, > 24'-28' DEPTH, EACH.
7. PAYMENT FOR MANHOLS DEEPER THAN 28' WILL BE MADE UNDER ITEMS NUMBERS:
   611-01-10 MANHOLE, 10' - 14' DEPTH, EACH (THROUGH)
   611-01-16 MANHOLE, 16' - 20' DEPTH, EACH.

APPROVED BY FHWA
(ALL OTHERS APPROVED BY TDOT)

STATE OF TENNESSEE
STANDARD DRAWING
DEPARTMENT OF TRANSPORTATION

STANDARD PRECAST
NO. 3
MANHOLE

AUG 1972 D-MH-2

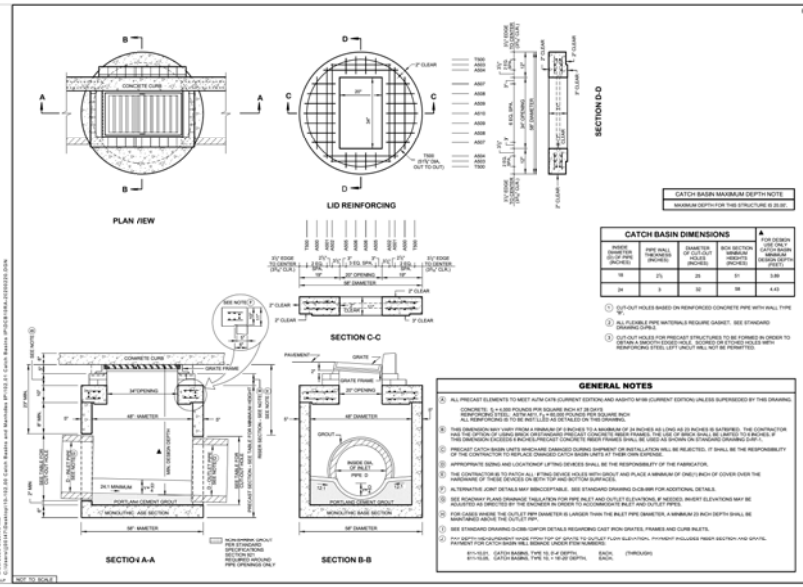

CATCH BASIN MAXIMUM DEPTH NOTE
MAXIMUM DEPTH FOR THIS STRUCTURE IS 20.00'.

CATCH BASIN DIMENSIONS				
INSIDE DIAMETER OF MANHOLE (INCHES)	PIPE WALL THICKNESS (INCHES)	DIAMETER OF CUT-OUT HOLE (INCHES)	BOX SECTION WIDTH X HEIGHT (INCHES)	FOR DESIGN USE ONLY CATCH BASIN MINIMUM DESIGN DEPTH (FEET)
18	2½	25	51	3.00
24	3	32	59	4.43

1. CUT-OUT HOLES BASED ON REINFORCED CONCRETE PIPE WITH WALL TYPE "B".
2. ALL FLEXIBLE PIPE MATERIALS REQUIRE GASKET. SEE STANDARD DRAWING D-PB-2.
3. CUT-OUT HOLES FOR PRECAST STRUCTURES TO BE FORMED IN ORDER TO OBTAIN A SMOOTH EDGED HOLE. SCORED OR STICHED HOLES WITH REINFORCING STEEL LEFT UNCUT WILL NOT BE PERMITTED.

GENERAL NOTES

1. ALL PRECAST ELEMENTS TO MEET AUTH CATS (CURRENT EDITION) AND AASHTO M199 (CURRENT EDITION) UNLESS SUPERSEDED BY THIS DRAWING.
   CONCRETE: f_c = 4,000 POUNDS PER SQUARE INCH AT 28 DAYS
   REINFORCING STEEL: ASTM A615, f_y = 60,000 POUNDS PER SQUARE INCH
   ALL REINFORCING IS TO BE INSTALLED AS DETAILED ON THIS DRAWING.
2. THIS DIMENSION MAY VARY FROM A MINIMUM OF 0 INCHES TO A MAXIMUM OF 24 INCHES AS LONG AS 23 INCHES IS SATISFIED. THE CONTRACTOR SHALL ADJUST THE LENGTH OF THE BOTTOM SECTION OF THE CATCH BASIN TO MEET THE DESIGN DEPTH. IF THIS DIMENSION EXCEEDS 4 INCHES PRECAST CONCRETE RISER FRAMES SHALL BE USED AS SHOWN ON STANDARD DRAWING D-PB-2.
3. PRECAST CATCH BASIN UNITS WHICH ARE DAMAGED DURING SHIPMENT OR INSTALLATION WILL BE REJECTED. IT SHALL BE THE RESPONSIBILITY OF THE CONTRACTOR TO REPLACE DAMAGED CATCH BASIN UNITS AT THEIR OWN EXPENSE.
4. APPROPRIATE SIZING AND LOCATIONS OF LIFTING DEVICES SHALL BE THE RESPONSIBILITY OF THE FABRICATOR.
5. THE CONTRACTOR IS TO PATCH ALL LIFTING DEVICE HOLES WITH GROUT AND PLACE A MINIMUM OF ONE(1) INCH OF COVER OVER THE HARDWARE OF THESE DEVICES ON BOTH TOP AND BOTTOM SURFACES.
6. ALTERNATIVE JOINT DETAILS MAY BE ACCEPTABLE. SEE STANDARD DRAWING D-CB-6MR FOR ADDITIONAL DETAILS.
7. SEE ROADWAY PLANS DRAINAGE TABULATION FOR PIPE INLET AND OUTLET ELEVATIONS, IF NEEDED, INVERT ELEVATIONS MAY BE ADJUSTED AS DIRECTED BY THE ENGINEER IN ORDER TO ACCOMMODATE INLET AND OUTLET PIPES.
8. FOR CASES WHERE THE OUTLET PIPE DIAMETER IS LARGER THAN THE INLET PIPE DIAMETER, A MINIMUM 23 INCH DEPTH SHALL BE MAINTAINED ABOVE THE OUTLET PIPE.
9. SEE STANDARD DRAWING D-CBS-10/FOR DETAILS REGARDING CAST IRON GRATES, FRAMES AND CURB INLETS.
10. PAY DEPTH REQUIREMENT RANGE FROM TOP OF GRATE TO OUTLET FLOW ELEVATION. PAYMENT INCLUDES RISER SECTION AND GRATE. PAYMENT FOR CATCH BASIN WILL BE MADE UNDER ITEM NUMBERS:
    611-10-01 CATCH BASINS, TYPE 10, 0'-4' DEPTH, EACH. (THROUGH)
    611-10-05 CATCH BASINS, TYPE 10, > 16'-20' DEPTH, EACH.

APPROVED BY FHWA
(ALL OTHERS APPROVED BY TDOT)

STATE OF TENNESSEE
STANDARD DRAWING
DEPARTMENT OF TRANSPORTATION

STANDARD PRECAST
48" CIRCULAR NO. 10
CATCH BASIN
FOR USE WITH 6"
VERTICAL CURB

09-05-2006 D-CB-10RA

REVISIONS		
NO.	DATE	DESCRIPTION

LINCOLN MEMORIAL UNIVERSITY – BUILDING NO. 2
PROPOSED PLAIN FOR PARKING
KNOX COUNTY, TENNESSEE

Vaughn & Melton
Kentucky 606-248-6600
Georgia 770-627-3590
North Carolina 828-253-2796
South Carolina 843-974-5650
Tennessee 865-546-5800
www.vaughnmelton.com

Copyright © 2020
All Rights Reserved

DRAWN: LCB
CHECKED: MCN
JOB NO: 002020-12
SCALE: n/a
DATE: January 2022
FILE NAME:
DRAWING TITLE: DRAINAGE DETAILS
SHEET: 7

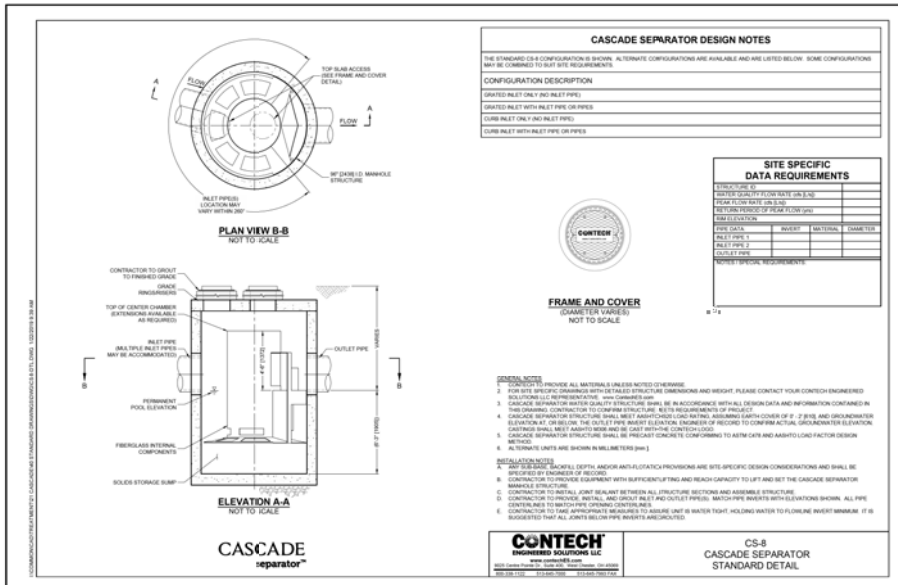

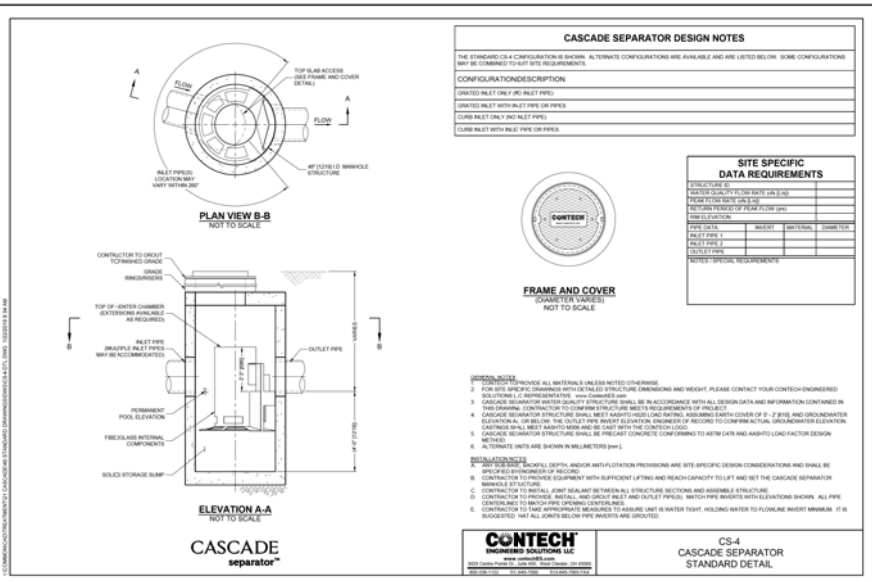

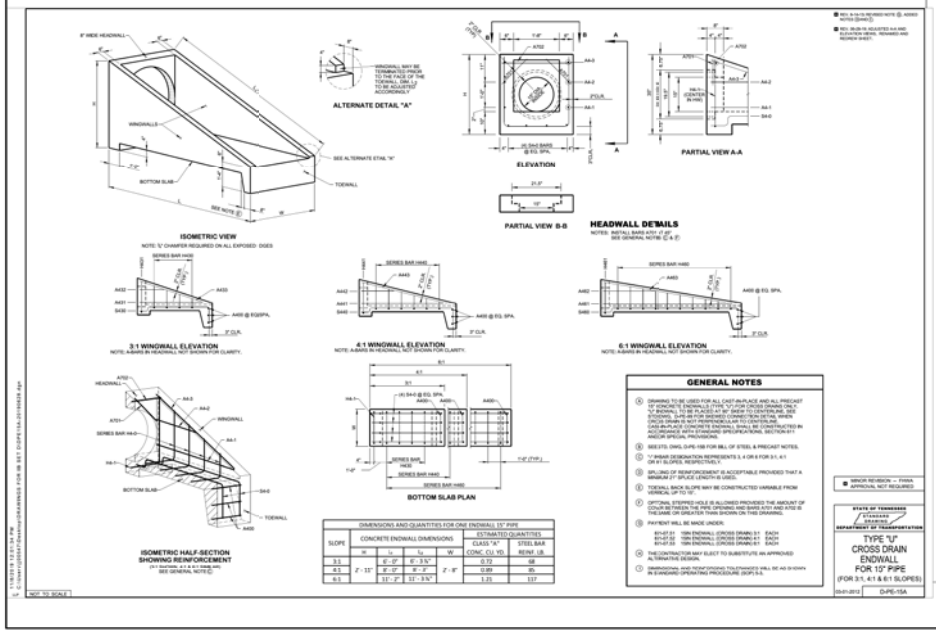

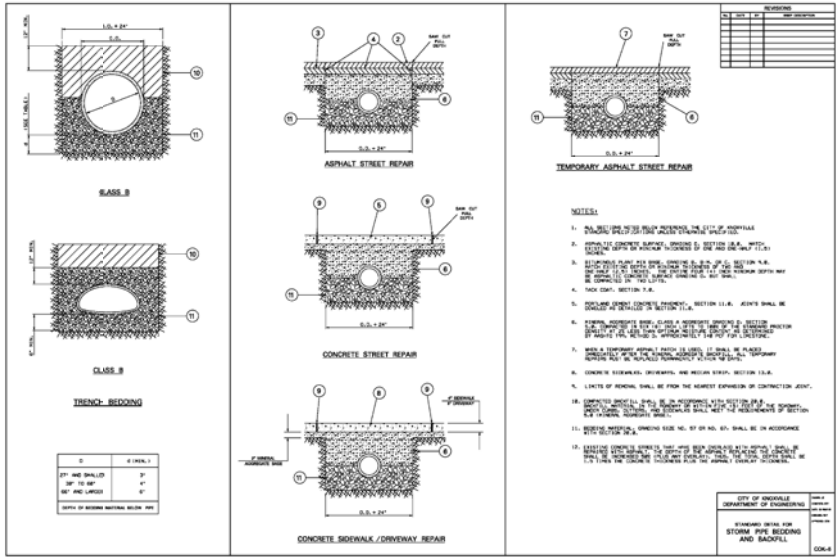

REVISIONS

NO.	DATE	DESCRIPTION

LINCOLN MEMORIAL UNIVERSITY – BUILDING NO. 2
PROPOSED PLAN FOR PARKING
KNOX COUNTY, TENNESSEE

Vaughn & Melton
Kentucky 606-248-6600
Georgia 770-627-3590
North Carolina 828-253-2796
South Carolina 843-974-5650
Tennessee 865-546-5800
www.vaughnmelton.com
Copyright © 2020
All Rights Reserved

DRAWN: LCB
CHECKED: MCN
JOB NO: 0020-12
SCALE: n/a
DATE: January 2022
FILE NAME:
DRAWING TITLE: DRAINAGE DETAILS

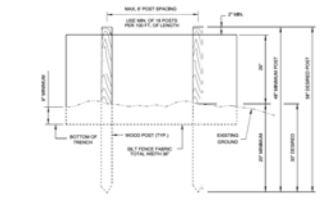

ELEVATION VIEW

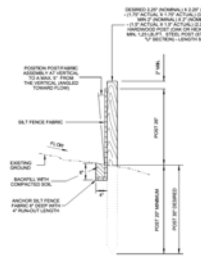

SECTIONAL VIEW

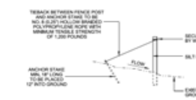

SILT FENCE TIEBACK

FOR STEEL POSTS OR WOOD POSTS

(WHEN REQUIRED BY THE ENGINEER OR NOTED IN THE PLANS. COST TO BE INCLUDED IN THE ITEMS FOR SILT FENCE)

SILT FENCE FABRIC SPECIFICATIONS

FABRIC PROPERTY AND TEST METHODS	REQUIRED PHYSICAL PROPERTIES MARV VALUES OF TEST DATA)
GEOTEXTILE FABRIC TYPE	WOVEN SLIT FILM (PER AASHTO M288)
APPARENT OPENING SIZE (ASTM D4751)	#30 TO #70 STANDARD SIEVE
WATER FLUX (ASTM D4491)	≥ 4 GPM/FT²
TENSILE STRENGTH (ASTM D4632)	≥ 120 LB. (WARP DIRECTION) X 100 LB. (FILL DIRECTION)
ULTRAVIOLET STABILITY (AFTER 500 HRS PER ASTM D4355)	≥ 70%
ELONGATION (ASTM D4632)	≤ 20% (MAX)
BURST STRENGTH (ASTM D3786)	≥ 250 PSI
PUNCTURE STRENGTH (ASTM D4833)	≥ 60 LB.
TRAPEZOIDAL TEAR (ASTM D4533)	≥ 50 LB. (WARP DIRECTION) X 40 LB. (FILL DIRECTION)

SILT FENCE GENERAL NOTES

(A) SILT FENCE IS USED TO INTERCEPT SMALL AMOUNTS OF SEDIMENT AND REDUCE VELOCITY FROM SHEET FLOW ONLY. DO NOT USE IT ADJACENT TO NATURAL WATER RESOURCES (WETLANDS OR STREAMS) OR ACROSS CONCENTRATED FLOW PATHS.

(B) THE MAXIMUM DRAINAGE AREA SIZE FOR A CONTINUOUS BARRIER SHALL BE 1/4 ACRE PER 100 LINEAR FEET OF FENCE LENGTH UP TO A MAXIMUM DRAINAGE AREA OF 2 ACRES. MAXIMUM SLOPE LENGTH BEHIND FENCE ON UPSLOPE SIDE SHALL BE 110 FEET (AS MEASURED ALONG THE GROUND SURFACE).

(C) WHEN INSTALLED AT THE TOE OF A SLOPE, SILT FENCE SHOULD BE PLACED 5 FEET TO 7 FEET AWAY FROM THE TOE TO ALLOW SPACE FOR PONDING OF WATER, COLLECTION OF SEDIMENT AND EASE OF MAINTENANCE AND REMOVAL.

(D) WHEN TWO SECTIONS OF SILT FENCE FABRIC ADJOIN EACH OTHER THEY SHALL BE JOINED ACCORDING TO THE DETAILS ON STANDARD DRAWING EC-STR-3E.

(E) MAINTENANCE SHALL BE PERFORMED AS NEEDED; CAPTURED SOIL MATERIAL SHALL BE REMOVED WHEN "BULGES" DEVELOP IN THE SILT FENCE AND/OR OTHER EVIDENCE OF FILTER CLOGGING IS OBSERVED.

(F) STEEL POSTS SHALL BE ROLLED FROM HIGH CARBON STEEL AND SHALL HAVE A MINIMUM WEIGHT OF 1.25 LB/FT. POSTS SHALL BE HOT-DIPPED GALVANIZED OR PAINTED WITH HIGH GRADE WEATHER RESISTANT STEEL PAINT. STEEL POSTS SHALL BE EQUIPPED WITH AN ANCHOR PLATE HAVING A MINIMUM AREA OF 14 SQUARE INCHES. POSTS SHALL BE STUDDED, EMBOSSED, OR PUNCHED TO AID IN THE ATTACHMENT OF THE WIRE BACKING. POSTS AND ANCHOR PLATES SHALL CONFORM TO THE REQUIREMENTS OF ASTM A702.

(G) WHEN STEEL POSTS ARE USED THEY SHALL HAVE A PROJECTION FOR FASTENING WIRE TO THEM. THE WIRE FASTENERS SHOULD BE EVENLY SPACED WITH AT LEAST FIVE PER POST.

(H) IF THE FILTER MATERIAL IS STAPLED TO THE WOODEN STAKES, HEAVY DUTY WIRE STAPLES WITH ONE-HALF INCH LENGTH AND 1 INCH WIDTH SHALL BE USED AND EVENLY SPACED WITH AT LEAST FOUR PER POST. SILT FENCE FABRIC SHALL NOT BE STAPLED TO TREES.

(I) SILT FENCES SHOULD BE PLACED ALONG OR NEAR THE GROUND CONTOUR. THE BOTTOM OF FENCE AT GROUNDLINE SHOULD BE ON A ZERO PERCENT (0%) GRADE, PLUS OR MINUS FIVE TENTHS OF ONE PERCENT (0.5%). THE ENDS OF A ROW OF SILT FENCE SHOULD BE TURNED UPSLOPE FORMING A J-HOOK TO FILTER ANY CONCENTRATED FLOW BEHIND FENCE.

(J) A PREASSEMBLED SILT FENCE MEETING THE REQUIREMENTS OF THIS DRAWING IS ACCEPTABLE IN LIEU OF A FIELD CONSTRUCTED SILT FENCE.

(K) STATIC SLICING IS THE PREFERRED METHOD OF FENCE INSTALLATION. STATIC SLICING INVOLVES THE INSERTION OF A NARROW CUTTING BLADE, PLACED AT THE SPECIFIED ANCHOR DEPTH FOR THE GIVEN FABRIC AS SHOWN ON THE APPLICABLE DETAIL, AND SIMULTANEOUSLY PULLING THE FENCE FABRIC INTO THE TRENCH AS THE TRENCH IS BEING EXCAVATED. ALTERNATE TRENCH-BASED METHODS ARE ALSO ACCEPTABLE. DO NOT USE EQUIPMENT THAT WILL DISTURB WIDER THAN 4" IN-SITU SOIL SUCH AS BACKHOE. FOR TRENCH-BASED INSTALLATIONS, SILT FENCING SHALL BE INSTALLED PER THE FOLLOWING STEPS AND IN THE FOLLOWING ORDER:

1. EXCAVATE TRENCH A MAXIMUM OF 4 INCHES WIDE AND 6 INCHES DEEP. THE TRENCH SHALL BE HAND-CLEANED FOLLOWING EXCAVATION TO REMOVE BULKY DEBRIS SUCH AS ROCKS, STICKS, AND SOIL CLODS FROM THE TRENCH.
2. INSTALL FABRIC IN TRENCH.
3. BACKFILL TRENCH (OVER-FILL) WITH SOIL PLACED AROUND FABRIC.
4. COMPACT SOIL BACKFILL WITH MECHANICAL EQUIPMENT. DO NOT DAMAGE THE FABRIC DURING COMPACTION (DAMAGED FABRIC SHALL BE REPLACED).
5. DRIVE AND SET SUPPORT POSTS PER SPACING REQUIREMENTS GIVEN ON THE APPLICABLE FENCE DETAIL. FOR PRE-ASSEMBLED SILT FENCE, DRIVE SUPPORT IN TO GROUND FIRST, FOLLOWED BY FABRIC PLACEMENT IN TRENCH.
6. ATTACH FABRIC TO THE POSTS USING WIRE TIES OR STAPLES. SPACING AND DENSITY OF TIES OR STAPLES SHALL BE INSTALLED AS DESCRIBED IN NOTES (G) AND (H).

(L) ONLY SILT FENCE FABRIC LISTED ON THE QUALIFIED PRODUCTS LIST MAY BE USED. ANY PRODUCTS LISTED ON THE QUALIFIED PRODUCTS LIST AS AN APPROVED ALTERNATE MAY ALSO BE USED.

(M) SILT FENCE SHALL BE PAID FOR UNDER ITEM NUMBER 209-08.03 TEMPORARY SILT FENCE (WITHOUT BACKING) PER LINEAR FOOT. PAYMENT SHALL INCLUDE ALL MATERIALS AND LABOR NECESSARY FOR CONSTRUCTION, MAINTENANCE, AND REMOVAL OF THE SILT FENCE.

(N) SEDIMENT SHALL BE REMOVED FROM BEHIND THE SILT FENCE WHEN IT HAS ACCUMULATED TO ONE-HALF THE ORIGINAL HEIGHT OF THE STRUCTURE AND PAID FOR UNDER ITEM NUMBER 209-05 SEDIMENT REMOVAL PER CUBIC YARD.

EROSION CONTROL PLAN LEGEND: * SF * SF * SF * SILT FENCE

NOT TO SCALE

REV. 12-18-03: MODIFIED TABLE (1) AND GENERAL NOTE (I).
REV. 7-28-04: CHANGED VALUES IN TABLE (1) FROM MEAN TO MARV VALUES.
REV. 4-15-06: REMOVED POA SPECS. FROM TABLE (1). ADDED NOTE (L). REVISED TABLE TITLE. REORDERED GENERAL NOTES. REFORMATTED SHEET. REVISED NOTES. MISC. EDITS TO DRAWING.
REV. 4-1-08: REMOVED TEMPORARY REFERENCE. REVISED NOTES, AND MISC. EDITS TO DRAWING.
REV. 8-1-12: MINOR EDITS TO GENERAL NOTES.
REV. 3-16-22: CHANGED SECOND NOTE (M) TO NOTE (N).
REV. 06-01-20: ADDED AASHTO REFERENCE IN TABLE. UPDATED GENERAL NOTES (K) AND REDREW SHEET.
REV. 06-16-21: ADDED ALTERNATE POST SIZE AND REVISED POST EMBEDMENT LENGTH.

STATE OF TENNESSEE
STANDARD DRAWING
DEPARTMENT OF TRANSPORTATION

SILT FENCE

12-18-2002 | EC-STR-3B

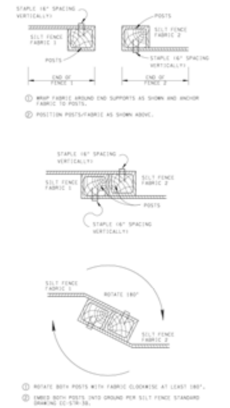

(1) WRAP FABRIC AROUND END SUPPORTS AS SHOWN AND ANCHOR FABRIC TO POSTS.
(2) POSITION POSTS/FABRIC AS SHOWN ABOVE.

(1) ROTATE BOTH POSTS WITH FABRIC CLOCKWISE AT LEAST 180°.
(2) EMBED BOTH POSTS INTO GROUND PER SILT FENCE STANDARD DRAWING EC-STR-3B.

PLAN VIEW
JOINING SILT FENCE
FABRIC SECTIONS (WOOD POSTS)

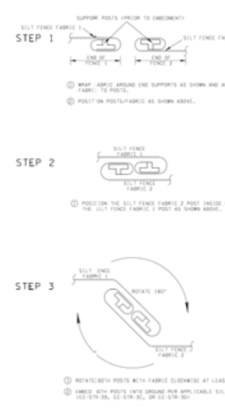

(1) WRAP FABRIC AROUND END SUPPORTS AS SHOWN AND ANCHOR FABRIC TO POSTS.
(2) POSITION POSTS/FABRIC AS SHOWN ABOVE.

(1) POSITION THE SILT FENCE FABRIC 2 POST INSIDE OF THE SILT FENCE FABRIC 1 POST AS SHOWN ABOVE.

(1) ROTATE BOTH POSTS WITH FABRIC CLOCKWISE AT LEAST 180°.
(2) EMBED BOTH POSTS INTO GROUND PER APPLICABLE SILT FENCE STANDARD DRAWING. (EC-STR-3B, EC-STR-3C, OR EC-STR-3D)

PLAN VIEW
JOINING SILT FENCE
FABRIC SECTIONS (STEEL POSTS)

REV. 4-15-06: REFORMATTED SHEET, REVISED NOTES, MISC. EDITS TO DRAWING.
REV. 4-1-08: MISC. EDITS TO DRAWING, CHANGED DRAWING NAME, REFORMATTED SHEET.

MINOR REVISION -- FHWA APPROVAL NOT REQUIRED.

STATE OF TENNESSEE
DEPARTMENT OF TRANSPORTATION

SILT FENCE FABRIC JOINING DETAILS

12-18-02 | EC-STR-3E

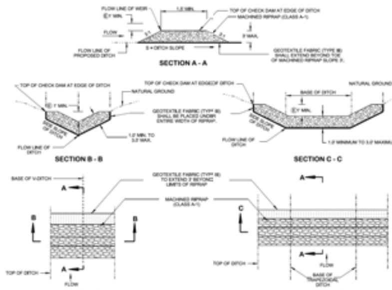

DETAIL FOR V-DITCH

DETAIL FOR TRAPEZOIDAL DITCH

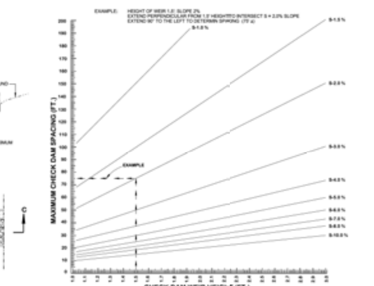

ROCK CHECK DAM SPACING

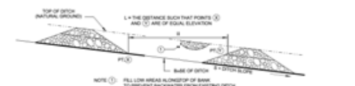

NOTE (1): FILL LOW AREAS ALONG TOP OF BANK TO PREVENT BACKWATER FROM EXISTING DITCH

DETAIL FOR SPACING BETWEEN CHECK DAMS

ROCK CHECK DAM ESTIMATED QUANTITIES

	2:1 DITCH SLOPE			3:1 DITCH SLOPE			4:1 DITCH SLOPE		
	HEIGHT FT	RIP RAP TON	GEOTEXTILE SF	HEIGHT FT	RIP RAP TON	GEOTEXTILE SF	HEIGHT FT	RIP RAP TON	GEOTEXTILE SF
V-DITCH (2)	1.5	6.5	18.8	1.5	9.2	23.7	1.5	12.0	30.9
	2.0	13.8	26.6	2.0	18.4	34.8	2.0	26.1	45.4
	2.5	22.6	33.9	2.5	32.3	48.3	2.5	42.1	62.5
	3.0	36.3	44.7	3.0	51.7	63.2	3.0	67.3	82.5
	HEIGHT FT	RIP RAP TON	GEOTEXTILE SF	HEIGHT FT	RIP RAP TON	GEOTEXTILE SF	HEIGHT FT	RIP RAP TON	GEOTEXTILE SF
TRAPEZOIDAL DITCH (3)	1.5	8.9	20.8	1.5	11.6	26.7	1.5	14.4	36.9
	2.0	18.8	31.8	2.0	22.5	42.1	2.0	27.8	50.7
	2.5	28.7	42.6	2.5	36.1	56.4	2.5	47.8	71.2
	3.0	44.7	54.7	3.0	58.8	73.2	3.0	73.3	92.4

(2) ESTIMATED QUANTITIES BASED ON 4:1 SIDE SLOPES. QUANTITIES WILL VARY BASED ON ACTUAL DITCH CONFIGURATION.

(3) ESTIMATED QUANTITIES BASED ON 4 FT BOTTOM WIDTH, AND 4:1 SIDE SLOPES. QUANTITIES WILL VARY BASED ON ACTUAL DITCH CONFIGURATION.

EROSION CONTROL PLAN LEGEND : ▶ ROCK CHECK DAM

NOT TO SCALE

ROCK CHECK DAM GENERAL NOTES

(A) ROCK CHECK DAMS ARE TO BE USED FOR VELOCITY REDUCTION AND EROSION PREVENTION IN AREAS WHERE CONCENTRATED FLOW EXISTS. ROCK CHECK DAMS SHALL NOT BE USED IN STREAMS OR OTHER NATURAL WATER RESOURCES. ROCK CHECK DAMS ARE NOT TO BE USED FOR SEDIMENT CONTROL AND SHOULD NOT BE CONSIDERED A SEDIMENT TRAPPING DEVICE.

(B) THE DRAINAGE AREA FOR THE ROCK CHECK DAMS SHALL BE 10 ACRES OR LESS.

(C) ROCK CHECK DAMS MAY REMAIN IN PLACE AS PERMANENT CHECK DAMS, IF SHOWN IN THE PLANS OR AS DIRECTED BY THE ENGINEER.

(D) THE CENTER OF THE ROCK CHECK DAM MUST BE AT LEAST ONE (1) FOOT LOWER THAN THE OUTER EDGES.

(E) THE DEPTH OF FLOW ON THE CENTER OF THE STRUCTURE SHALL BE COMPUTED FOR THE PEAK FLOW RATE GENERATED BY THE 2-YEAR, 24-HOUR STORM IN ORDER TO ENSURE THAT THE TOP OF THE STRUCTURE WILL NOT BE OVERTOPPED. FOR SITES WHICH DRAIN TO EXCEPTIONAL TENNESSEE WATERS OR SEDIMENT-IMPAIRED STREAMS, THE DEPTH SHOULD BE DETERMINED FOR THE 5-YEAR, 24-HOUR PEAK FLOW RATE. THIS WILL ELIMINATE THE ROCK-SOIL FAILURE POINT WHERE THE ROCK CHECK DAM AND NATURAL GROUND MERGE.

(F) FOR SITES WHICH DRAIN TO EXCEPTIONAL TENNESSEE WATERS OR SEDIMENT-IMPAIRED STREAMS, THE MINIMUM HEIGHT OF THE STRUCTURE ABOVE THE DITCH BOTTOM SHALL BE INCREASED TO 2 FEET.

(G) THE MAXIMUM SPACING BETWEEN ROCK CHECK DAMS SHOULD BE SUCH THAT THE TOE OF THE UPSTREAM DAM IS AT THE SAME ELEVATION AS THE FLOW LINE OF THE WEIR OF THE DOWNSTREAM DAM (SEE ROCK CHECK SPACING GRAPH THIS SHEET).

(H) ONLY GEOTEXTILE FABRIC (TYPE III) LISTED ON THE QUALIFIED PRODUCTS LIST SHALL BE USED.

(I) PRODUCTS LISTED ON THE QUALIFIED PRODUCTS LIST FOR FILTER SOCK DITCH APPLICATION (SEE STANDARD DRAWING EC-STR-8) MAY BE USED AND SHALL BE PAID UNDER FOLLOWING ITEM NUMBER:

209-08.09, FILTER SOCK CHECK DAM, EACH.

(J) ROCK CHECK DAMS SHALL BE PAID FOR UNDER THE FOLLOWING ITEM NUMBER:

209-08.07, ROCK CHECK DAM, EACH.

PAYMENT SHALL INCLUDE ALL MATERIALS AND LABOR NECESSARY FOR CONSTRUCTION, MAINTENANCE, AND REMOVAL OF ROCK CHECK DAMS.

(K) SEDIMENT SHALL BE REMOVED FROM BEHIND THE ROCK CHECK DAMS WHEN IT HAS ACCUMULATED TO ONE-HALF THE ORIGINAL HEIGHT OF THE DAM AND PAID FOR UNDER ITEM NUMBER:

209-05, SEDIMENT REMOVAL, C.Y.

REV. 12-18-03: CHANGED DRAWING NO. FROM ESC-STR-6 TO EC-STR-6.
REV. 7-28-04: MADE MINOR CORRECTIONS TO GENERAL NOTES.
REV. 4-15-06: CHANGED PAY ITEMS FOR CHECK DAMS.
REV. 3-27-07: CHANGED DESCRIPTION FOR GEOTEXTILE FABRIC (TYPE III, CLASS A) TO GEOTEXTILE FABRIC (TYPE III).
REV. 12-18-02: CHANGED GENERAL NOTE (I).
REV. 1-22-03: CORRECTED NOTE IN SECTION A-A.
REV. 4-15-06: REFORMATTED SHEET, REVISED NOTES, MISC. EDITS TO DRAWING.
REV. 4-1-08: REMOVED TEMPORARY REFERENCE, REVISED NOTES, MISC. EDITS TO DRAWING, MODIFIED SPACING CHART.
REV. 8-1-12: MINOR EDITS TO GENERAL NOTES.
REV. 5-6-16: REVISED QUANTITIES TABLE, REVISED GENERAL NOTE (I), REVISED DITCH DETAIL.
REV. 11-20-20: REDREW SHEET, REVISED GENERAL NOTE (J) ITEM DESCRIPTION.

STATE OF TENNESSEE
STANDARD DRAWING
DEPARTMENT OF TRANSPORTATION

ROCK CHECK DAM

10-26-1992 | EC-STR-6

CURB INLET PROTECTION TYPE 1
LOW VOLUME, LOW SPEED TRAFFIC AREAS ONLY

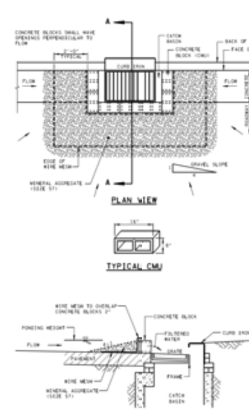

CURB INLET PROTECTION TYPE 2
LOW VOLUME, LOW SPEED TRAFFIC AREAS ONLY

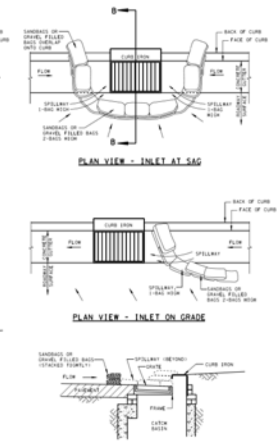

CURB INLET PROTECTION TYPE 1 GENERAL NOTES

(A1) CURB INLET PROTECTION (TYPE 1) IS USED TO INTERCEPT SEDIMENT AND PREVENT SEDIMENT LADEN WATER FROM ENTERING STORM SEWER SYSTEMS. THIS DEVICE IS INTENDED AS A SECONDARY SEDIMENT CONTROL MEASURE. CURB INLET PROTECTION (TYPE 1) IS USED IN AREAS WHERE PONDING IS NOT A CONCERN AND ADEQUATE AREA IS AVAILABLE FOR PONDING.

(A2) MAXIMUM DRAINAGE AREA IS 1 ACRE.

(A3) CONCRETE BLOCKS SHALL BE PLACED LENGTHWISE ON THEIR SIDES IN A SINGLE ROW AROUND THE PERIMETER OF THE INLET. THE ENDS OF ADJACENT BLOCKS SHOULD ABUT TIGHTLY TOGETHER.

(A4) ADDITIONAL BLOCKS WITH OPENINGS PERPENDICULAR TO FLOW MAY BE REQUIRED DEPENDING ON AMOUNT OF FLOW AND AVAILABLE PONDING AREA.

(A5) WIRE MESH SHALL BE 19 GUAGE GALVANIZED HARDWARE CLOTH WITH 1/4 INCH OPENINGS. WIRE SHALL BE SHAPED TO FIT SECURELY AGAINST CONCRETE BLOCK AND SHALL LAP OVER THE TOP OF THE BLOCK A MINIMUM OF 2 INCHES.

(A6) CURB INLET PROTECTION (TYPE 1) SHALL BE PAID FOR UNDER THE FOLLOWING ITEM NUMBER:

209-09.40 CURB INLET PROTECTION (TYPE 1) PER EACH

PAYMENT SHALL INCLUDE ALL MATERIALS AND LABOR NECESSARY FOR CONSTRUCTION, MAINTENANCE, AND REMOVAL OF CURB INLET PROTECTION (TYPE 1).

(A7) ANY PRODUCT LISTED ON THE QUALIFIED PRODUCTS LIST AS AN APPROVED ALTERNATE IS ALSO ACCEPTABLE.

(A8) MAINTENANCE SHALL BE PERFORMED AS NEEDED. FOR PROPER FUNCTION, SEDIMENT REMOVAL SHALL BE PERFORMED CONTINUOUSLY AND/OR AFTER EVERY RAIN EVENT AND PAID FOR UNDER ITEM NUMBER 209-05, SEDIMENT REMOVAL, PER CUBIC YARD.

CURB INLET PROTECTION TYPE 2 GENERAL NOTES

(B1) CURB INLET PROTECTION (TYPE 2) IS USED TO INTERCEPT SEDIMENT AND PREVENT SEDIMENT LADEN WATER FROM ENTERING STORM SEWER SYSTEMS. THIS DEVICE IS INTENDED AS A SECONDARY SEDIMENT CONTROL MEASURE. CURB INLET PROTECTION (TYPE 2) IS USED IN AREAS WHERE PONDING IS NOT A CONCERN AND ADEQUATE AREA IS AVAILABLE FOR PONDING.

(B2) MAXIMUM DRAINAGE AREA IS 1 ACRE.

(B3) MAXIMUM TOP OF SPILLWAY ELEVATION = TOP OF CURB ELEVATION MINUS 1 INCH.

(B4) BAGS SHALL BE MADE OF EITHER BURLAP OR GEOTEXTILE FABRIC AND FILLED WITH CLEAN MINERAL AGGREGATE (SIZE 57) OR SAND.

(B5) PACK SAND/GRAVEL FILLED BAGS TIGHTLY TOGETHER END TO END TO ENSURE NO SEDIMENT FLOWS BETWEEN OR UNDERNEATH THE BAGS. WHERE TIGHT FIT IS UNACHIEVABLE, INSTALL GEOTEXTILE FABRIC (TYPE III) ALONG THE UPSTREAM FACE OF THE BAGS LAPPING OVER THE TOP BAGS 6 INCHES AND EXTENDING GEOTEXTILE FABRIC (TYPE III) A MINIMUM OF 18 INCHES UPSTREAM OF THE BAGS. COVER GEOTEXTILE FABRIC (TYPE III) WITH MINERAL AGGREGATE (SIZE 57) STONE WEDGE TO THE TOP OF THE BAGS.

(B6) ONLY GEOTEXTILE FABRIC (TYPE III) LISTED ON THE QUALIFIED PRODUCTS LIST SHALL BE USED.

(B7) AN OVERFLOW SPILLWAY SHALL BE PROVIDED BY LEAVING AN OPENING OF ONE SAND OR GRAVEL BAG WIDE AND HIGH AS SHOWN. STORMS GREATER THAN 2-YEAR, 24 HOUR STORM SHOULD NOT OVERTOP THE CURB.

(B8) CURB INLET PROTECTION (TYPE 2) SHALL BE PAID FOR UNDER THE FOLLOWING ITEM NUMBER:

209-09.41 CURB INLET PROTECTION (TYPE 2) PER EACH

PAYMENT SHALL INCLUDE ALL MATERIALS AND LABOR NECESSARY FOR CONSTRUCTION, MAINTENANCE, AND REMOVAL OF CURB INLET PROTECTION (TYPE 2).

(B9) ANY PRODUCT LISTED ON THE QUALIFIED PRODUCTS LIST AS AN APPROVED ALTERNATE IS ALSO ACCEPTABLE.

(B10) MAINTENANCE SHALL BE PERFORMED AS NEEDED. FOR PROPER FUNCTION SEDIMENT REMOVAL SHALL BE PERFORMED CONTINUOUSLY AND/OR AFTER EVERY RAIN EVENT AND PAID FOR UNDER ITEM NUMBER 209-05, SEDIMENT REMOVAL, PER CUBIC YARD.

REV. 4-15-06: REFORMATTED SHEET, REVISED NOTES, MISC. EDITS TO DRAWING.
REV. 4-1-08: MISC. MINOR EDITS AND GENERAL NOTE REVISIONS.
REV. 8-1-12: MINOR EDITS TO GENERAL NOTES.

MINOR REVISION -- FHWA APPROVAL NOT REQUIRED.

NOT TO SCALE

STATE OF TENNESSEE
DEPARTMENT OF TRANSPORTATION

CURB INLET PROTECTION TYPE 1 & 2

1-20-06 | EC-STR-39

EROSION CONTROL PLAN LEGEND: (1) CURB INLET PROTECTION (TYPE 1) EROSION CONTROL PLAN LEGEND: CURB INLET PROTECTION (TYPE 2)

REVISIONS

NO.	DATE	DESCRIPTION

MILLARD COREY NAPIER
REGISTERED ENGINEER
AGRICULTURE COMMERCE
No. 120304
STATE OF TENNESSEE

LINCOLN MEMORIAL UNIVERSITY - BUILDING NO. 2
PROPOSED PLAN FOR PARKING

KNOX COUNTY, TENNESSEE

Vaughn & Melton

Kentucky 606-248-6600
Georgia 770-627-3590
North Carolina 828-253-2796
South Carolina 843-974-5650
Tennessee 865-546-5800
www.vaughnmelton.com

Copyright © 2020
All Rights Reserved

DRAWN:	LEB
CHECKED:	MCN
JOB NO:	012020-12
SCALE:	n/a
DATE:	January 2022
FILE NAME:	

DRAWING TITLE:

EROSION CONTROL DETAILS

SHEET: **9**

TECHNOLOGY CORRIDOR DEVELOPMENT

TTCDA Review Request

- ☐ BUILDING PERMIT - NEW CONSTRUCTION
- ☒ BUILDING PERMIT - EXPANSION OR RENOVATION
- ☐ BUILDING PERMIT - GRADING PLAN
- ☐ REZONING
- ☐ SIGNAGE
- ☐ ZONING VARIANCE
- ☒ ADMINISTRATIVE REVIEW
- ☐ BOARD REVIEW

Lincoln Memorial University

PUBLISHED APPLICANT NAME *- no individuals on behalf of -*

DATE FILED	MEETING DATE (IF APPLICABLE)	FILE NUMBER
2/21/2022	4/11/2022	4-B-22-TOA

CORRESPONDENCE

Correspondence related to this application will be directed to the contact listed below.

☐ APPLICANT ☐ OWNER ☐ OPTION HOLDER ☐ SURVEYOR ☒ ENGINEER ☐ ARCHITECT/LANDSCAPE ARCHITECT ☐ ATTORNEY

NAME	COMPANY
Luke Boyd	Vaughn & Melton Consulting Engineers

ADDRESS	CITY	STATE	ZIP
109 S 24th St.	Middlesboro	KY	40965

PHONE	EMAIL
(606)-248-6600	leboyd@vaughnmelton.com

CURRENT PROPERTY INFO

☐ MULTIPLE OWNERS / OPTION HOLDERS ☐ PART OF PARCEL

OWNER NAME *- if different -*	OWNER ADDRESS	OWNER PHONE/EMAIL
Lincoln Memorial University-David Laws	6965 Cumberland Gap Pwky.	david.laws@lmu.net

PROPERTY ADDRESS

~~9731~~ 0 Cogdill Rd. Knoxville, TN 37932

PARCEL ID(S)	PART OF PARCEL? (Y/N)	TRACT SIZE
118 17607	Y	3.85

STAFF USE ONLY

☐ CITY ☒ COUNTY

GENERAL LOCATION	DISTRICT
Landlocked parcel, southwest of Cogdill Rd south of Dutchtown Rd	3rd

ZONING	SECTOR PLAN LAND USE CLASSIFICATION
OP/TO	TP

PLANNING SECTOR	EXISTING LAND USE
Northwest County	Vacant parcel

REQUEST

BUILDING PERMIT

- ☐ NEW CONSTRUCTION
- ☒ EXPANSION OR RENOVATION
- ☐ GRADING PLAN

- ☐ REZONING
- ☐ SIGNAGE
- ☐ ZONING VARIANCE

PLAN MATERIALS:

- ☐ DEVELOPMENT PLAN
- ☐ BUILDING ELEVATIONS
- ☐ FLOOR PLAN
- ☒ LANDSCAPE PLAN
- ☐ SIGNAGE PLAN
- ☒ OFF-STREET PARKING

☐ OTHER:

WAIVERS OR VARIANCES REQUESTED? ☐ YES ☐ NO

ADMINISTRATIVE REVIEW: ☐ LIGHTING ☒ LANDSCAPING PLAN

RENOVATION OR EXPANSION

SUMMARY OF WORK TO BE PERFORMED:

The owner plans to expand the parking area behind the existing building.

ZONING VARIANCE

SUMMARY OF ZONING VARIANCE REQUEST:

REZONING

REZONE FROM: _____

TO: _____

SECTOR PLAN AMENDMENT FROM: _____

TO: _____

SIGNAGE

☐ YARD SIGN
AREA: _____
HEIGHT: _____
FINISH: _____

☐ BUILDING SIGN
AREA: _____
HEIGHT: _____
FINISH: _____

☐ OTHER SIGN
AREA: _____
HEIGHT: _____
TYPE: _____

STAFF USE ONLY

- ☐ TTCDA Checklist
- ☐ Property Owners/Option Holders

CODE	CODE	TOTAL
FEE 808 / $250	FEE	$250.00

AUTHORIZATION

By signing below *You certify that you are the property owner and/or authorized representative.*

Luke Boyd	Engineer	2/21/2022
APPLICATION AUTHORIZED BY	AFFILIATION	DATE
(606)-248-6600	leboyd@vaughnmelton.com	
PHONE NUMBER	EMAIL	
Michelle Portier	Michelle Portier	2/22/2022
STAFF SIGNATURE	PRINT NAME	DATE PAID